WINDOW SCHEDULE:

MARK	WINDOW SIZE		ROUGH OPENING		WINDOW TYPE	DETAIL			FINISH	REMARKS
	WIDTH	HEIGHT	WIDTH	HEIGHT		HEAD	JAMB	SILL		
G1	10' - 4 1/2"	2' - 10 3/4"	10' - 6"	3' - 0 1/4"	ALUM./GLASS	10/A6.1	10/A6.1 SIM.	10/A6.1	CLEAR ANODIZED	- INT. ALUMINUM WINDOW FRAMES BY NATIONAL ACCOUNT VENDOR.

GLASS TYPES

TYPE	DESCRIPTION
1	1" TEMPERED LOW-E INSULATING GLASS, PPG INDUSTRIES SOLARBAN ## (2) + CLEAR UP TO DOOR HEAD
2	1" HEAT STRENGTHENED LOW-E INSULATING GLASS, PPG INDUSTRIES SOLARBAN ## (2) + CLEAR ABOVE DOOR TRANSOM ABOVE DOOR HEAD
3	1/4" CLEAR TEMPERED GLASS UP TO 60" ABOVE FINISH FLOOR

STOREFRONT GENERAL NOTES:

1. ALL STOREFRONT DIMENSIONS SHOWN IN ELEVATION ARE ACTUAL WINDOW FRAME SIZES. BOTH THE FINISH OPENING & WINDOW FRAME SIZES ARE SHOWN IN WINDOW SCHEDULE.
2. REFER TO STOREFRONT SPECIFICATIONS.
3. ALL EXTERIOR EXPOSED ALUMINUM SURFACES TO BE CLEAR ANODIZED FINISH.
4. ALL INTERIOR EXPOSED ALUMINUM SURFACES TO BE CLEAR ANODIZED FINISH, U.N.O.
5. THE EXTERIOR STOREFRONT SYSTEM DESIGN IS BASED ON VISTAWALL FG-3000 SYSTEM (2 x 4 1/2" FRAME).
6. THE INTERIOR ALUMINUM WINDOW SYSTEM (1 1/2" x 5 1/4") IS BASED ON WESTERN INTEGRATED MATERIALS 300 SERIES FRAMES W/ 304-1 FLUSH TRIM, SUPPLIED THRU NATIONAL ACCOUNT VENDOR.
7. FIELD VERIFY ACTUAL OPENING PRIOR TO FABRICATION.
8. ALL GLAZING WITHIN 24" OF A DOOR AND / OR LESS THAN 60" ABOVE THE WALKING SURFACE SHALL BE SAFETY GLAZING.

C402.4 Fenestration (Prescriptive)
Fenestration shall comply with Sections C402.4.1 through C402.4.5 and Table C402.4. Daylight responsive controls shall comply with this section and Section C405.2.3.1.

TABLE C402.4
BUILDING ENVELOPE FENESTRATION MAXIMUM *U*-FACTOR AND SHGC REQUIREMENTS

CLIMATE ZONE	1	2	3	4 EXCEPT MARINE	5 AND MARINE 4	6	7	8
Vertical fenestration								
U-factor								
Fixed fenestration	0.50	0.50	0.46	0.38	0.38	0.36	0.29	0.29
Operable fenestration	0.65	0.65	0.60	0.45	0.45	0.43	0.37	0.37
Entrance doors	1.10	0.83	0.77	0.77	0.77	0.77	0.77	0.77
SHGC								
Orientation[a]	SEW	N	SEW	N	SEW	N	SEW	N	SEW	N	SEW	N	SEW	N
PF < 0.2	0.25	0.33	0.25	0.33	0.25	0.33	0.36	0.48	0.38	0.51	0.40	0.53	0.45	NR	0.45	N
0.2 ≤ PF < 0.5	0.30	0.37	0.30	0.37	0.30	0.37	0.43	0.53	0.46	0.56	0.48	0.58	NR	NR	NR	NR
PF ≥ 0.5	0.40	0.40	0.40	0.40	0.40	0.40	0.58	0.58	0.61	0.61	0.64	0.64	NR	NR	NR	NR
Skylights								
U-factor	0.75	0.65	0.55	0.50	0.50	0.50	0.50	0.50
SHGC	0.35	0.35	0.35	0.40	0.40	0.40	NR	NR

NR = No Requirement, PF = Projection Factor.
a. "N" indicates vertical fenestration oriented within 45 degrees of true north. "SEW" indicates orientations other than "N." For buildings in the southern hemisphere, reverse south and north. Buildings located at less than 23.5 degrees latitude shall use SEW for all orientations.

DESIGNER NOTE:
ON A PROJECT SPECIFIC BASIS, LOW-E INSULATED GLASS SPECIFICATION SHALL BE REVISED TO MEET REGIONAL ECC REQUIREMENTS.
TYPICAL SOLARBAN OPTIONS:
SOLARBAN 70 (2) + CLEAR - VLT=0.70 U-VALUE=0.29 SHGC=0.39
SOLARBAN 60 (2) + CLEAR - VLT=0.60 U-VALUE=0.28 SHGC=0.27
SOLARBAN 90 (2) + CLEAR - VLT=0.84 U-VALUE=0.29 SHGC=0.33

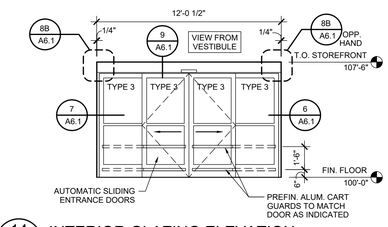

14 A6.1 INTERIOR GLAZING ELEVATION
SCALE: 1/4" = 1'-0"

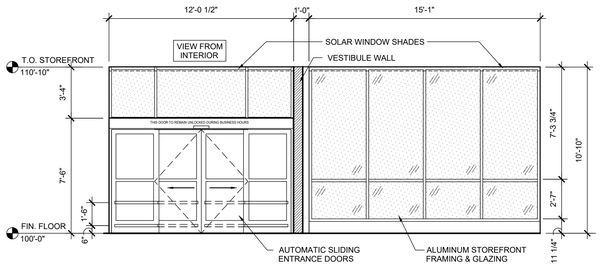

13 A6.1 INTERIOR WINDOW SHADE ELEVATION
SCALE: 1/4" = 1'-0"

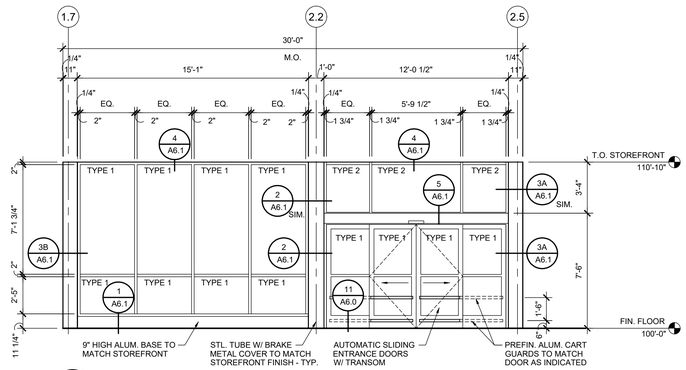

12 A6.1 EXTERIOR GLAZING ELEVATION
SCALE: 1/4" = 1'-0"

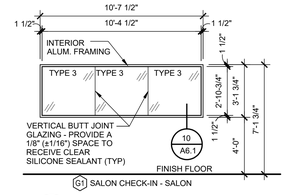

15 A6.1 INTERIOR GLAZING
SCALE: 1/4" = 1'-0"

HEADER SCHEDULE		
	'W' OPENING	HEADER
A	W < 6'-0"	NO HEADER
B	6'-0" < W < 10'-0"	(2)362S162-54
C	10'-0" < W < 14'-0"	(2)600S162-43
D	14'-0" < W < 18'-0"	(2)800S162-43 (1)
E	18'-0" < W < 24'-0"	(2)800S162-54
F	24'-0" < W < 32'-0"	(2)1200S162-68
G	32'-0" < W < 40'-0"	(2)1200S350-68
(1) ALTERNATIVE TO 800S-43, USE 600S-54		

JAMB SCHEDULE		
	'W' OPENING	JAMB
A	W < 6'-0"	NO BOX JAMB
B	W > 6'-0"	BOX JAMB

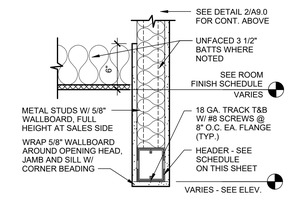

11 A6.1 HEADER AT CEILING
SCALE: 1 1/2" = 1'-0"

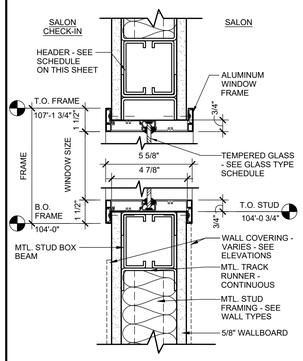

10 A6.1 WINDOW FRAME
SCALE: 3" = 1'-0"

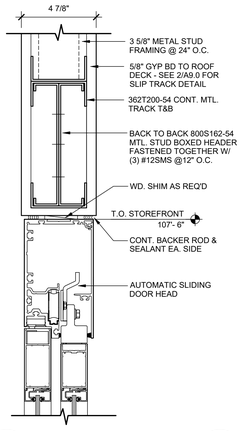

9 A6.1 DETAIL
SCALE: 3" = 1'-0"

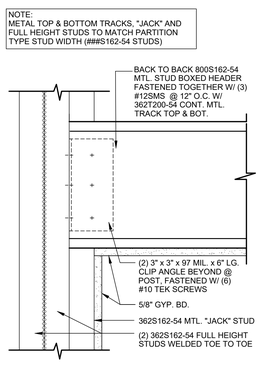

8B A6.1 BOX HEADER END SUPPORT
SCALE: 3" = 1'-0"

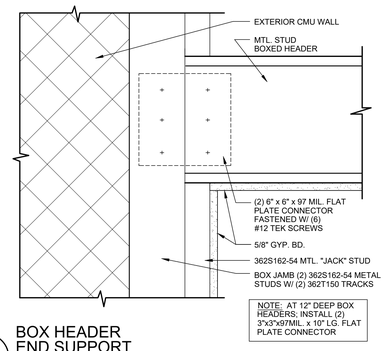

8A A6.1 BOX HEADER END SUPPORT
SCALE: 3" = 1'-0"

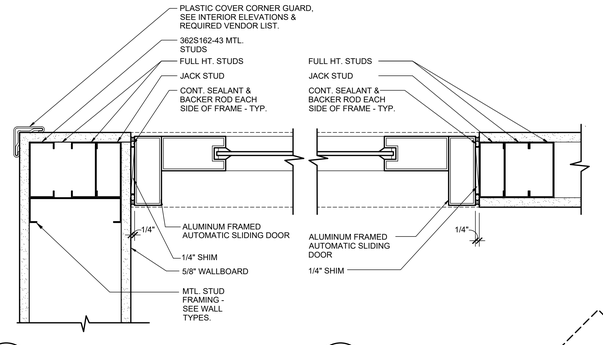

7 A6.1 DETAIL
SCALE: 3" = 1'-0"

6 A6.1 DETAIL
SCALE: 3" = 1'-0"

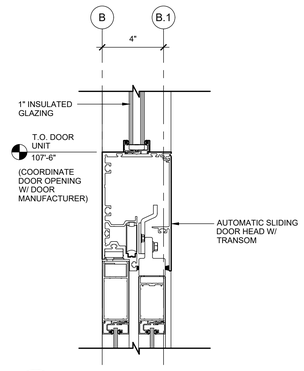

5 A6.1 DETAIL
SCALE: 3" = 1'-0"

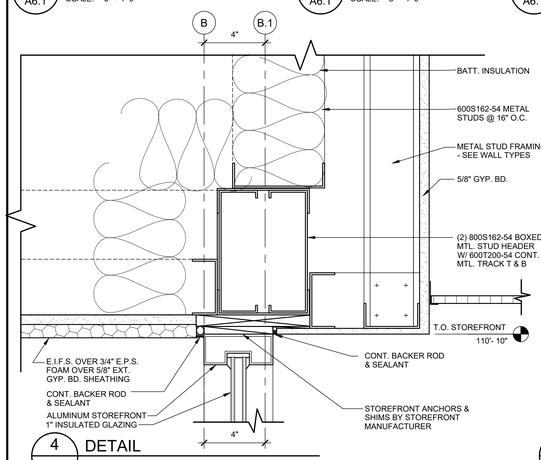

4 A6.1 DETAIL
SCALE: 3" = 1'-0"

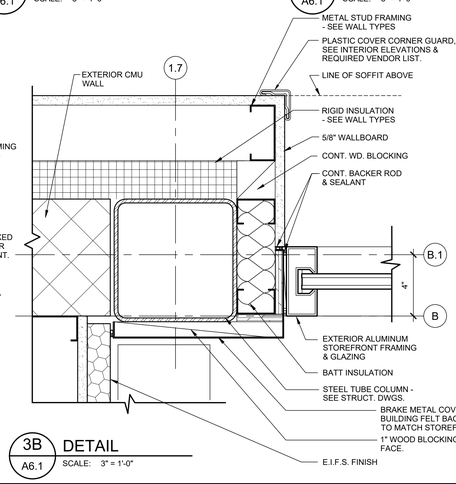

3B A6.1 DETAIL
SCALE: 3" = 1'-0"

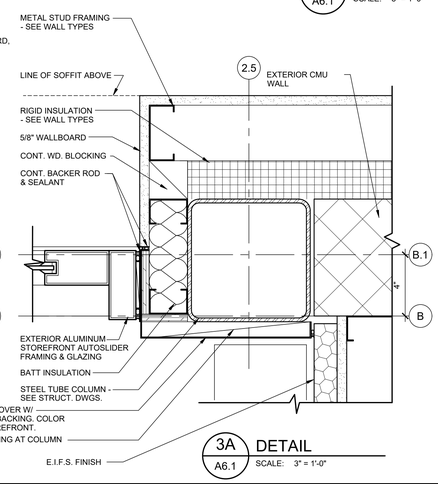

3A A6.1 DETAIL
SCALE: 3" = 1'-0"

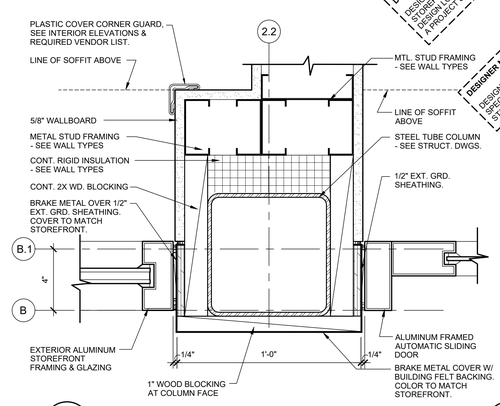

2 A6.1 DETAIL
SCALE: 3" = 1'-0"

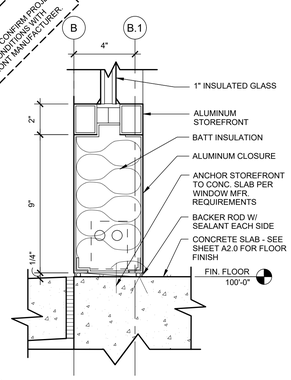

1 A6.1 STOREFRONT SILL DETAIL
SCALE: 3" = 1'-0"

DESIGNER NOTE:
DESIGNER TO VERIFY STOREFRONT SYSTEMS DESIGN LOADS ON A PROJECT SPECIFIC BASIS

DESIGNER NOTE:
DESIGNER TO CONFIRM PROJECT SPECIFIC DETAILS WITH STOREFRONT MANUFACTURER.

TENANT:
PETSMART
19601 North 27th Avenue
Phoenix, Arizona 85027 - (623) 580-6100

PROJECT:
16K 2025 US INSTRUCTION SET

FEBRUARY 12, 2025

ARCHITECT:

CONSULTANT:

SEAL:

CITY SEAL:

DISCLAIMER:
THIS DRAWING AND DESIGN IN COPYRIGHT PROTECTED WHICH SHALL NOT BE USED, REPRODUCED OR REVISED WITHOUT WRITTEN PERMISSION BY PETSMART. THE CONTRACTOR SHALL CHECK AND VERIFY ALL DIMENSIONS AND UTILITY LOCATIONS AND REPORT ALL ERRORS AND OMISSIONS PRIOR TO COMMENCING WORK.
THIS DRAWING IS NOT TO BE SCALED.

ISSUED FOR:

#	DESCRIPTION	DATE

PROJECT NO: 16K 2025 US INSTRUCTION SET
ORIGINAL SCALE: AS INDICATED
DRAWN BY: XXX
CHECKED BY: XXX
PAGE # 15 OF 47
IF THIS BAR IS NOT 1" LONG, ADJUST YOUR PLOTTING SCALE 1"
DISCIPLINE: ARCHITECTURAL

TITLE:
STOREFRONT ENTRY AND DETAILS

SHEET NUMBER:
A6.1